PILOTFLY H1+

Handheld 3AXIS Stabilizer for Mirrorless camera

PILOTFLY H1+
Height: 310 mm
Width:150 mm
Depth: 150 mm
Weight: 890 g

Camera tray size
Height: 110 mm
Width: 140 mm

Maximum supported weight
Camera : 1200 g

Maximum offset
On pan: 355˚ degrees
On tilt: 355˚ degrees, +/-180 ˚ degrees during work
On roll: 355˚ degrees, +/-60˚ degrees during work

Power
Power supply: Bulid-in Rechargeable Lithium Polymer 3-cell 11.1V 1800mAh battery
Operation time: 60 to 210 minutes
(depends on settings and actual camera weight)

Electronics
Main board: Custom AlexMos 3-axis SimpleBGC
Connectivity: Mini-USB
Control Mode: Default 3 user modes

For additional information visit:
www.pilotflytech.com

FB
www.facebook.com/pilotflytech

Technical support via e-mail
yanherlin@pilotfly.com.tw , info@pilotfly.de

NOTICE

All instructions, warranties and other documents are subject to change at the sole discretion of PILOTFLY CO. LTD. For up-to-date product literature, visit www.pilotfly.com.tw . Technical or operational information contained in this document.

DISCLAIMER

This is a sophisticated cinema product. It must be operated with caution and common sense and requires some basic mechanical ability. Failure to operate this product in a safe and responsible manner could result in injury or damage to the product or other property. This User Guide contains instructions for safety and operation. It is essential to read the entire User Guide and follow all instructions and warnings in the manual, prior to setup or use, in order to operate the PILOTFLY H1 correctly and avoid damage or injury.

PILOTFLY CO. LTD has made every effort to provide clear and accurate information in this User Guide, which is provided solely for the user's knowledge. While thought to be accurate, the information in this document is provided strictly "as is" and PILOTFLY CO. LTD will not be held responsible for issues arising from typographical errors or user's interpretation of the language used in this User Guide that is different from that intended by PILOTFLY CO. LTD.

PILOTFLY CO. LTD reserves the right to revise this User Guide and make changes from time to time without obligation to notify any person of such revisions or changes. In no event shall PILOTFLY CO. LTD, its employees or authorized agents be liable for any damages or losses, direct or indirect, arising from the use of any technical or operational information contained in this document.

BOX CONTENTS

Qty 1 - PILOTFLY H1 Handheld Stabilizer
(with built-in Li-Po batteries)

Qty 1 - Charger
Qty 1 - Smartphone holder
Qty 1 - M4 Hex wrench
Qty 1 - Battery extention cable (XT60)

BATTERIES AND BATTERY CHARGER

WARNING: You must read these safety instructions and warnings carefully before charging or using your batteries. Failure to exercise caution while using Lithium Polymer (LiPo) batteries and comply with the following warnings could result in battery malfunction, electrical issues, excessive heat, fire, or injury and property damage

Use and Discharge Warnings

1) During discharging and handling the batteries, the temperature must not exceed 160°F (71°C), otherwise, the battery may be damaged and may even result in fire.

2) Never discharge Li-Po battery below the Lowest Discharge Voltage 3v per cell, as it may cause irreversible damage which will deteriorate the battery performance and cycle life. Caution must be taken so that your Li-Poly batteries do not discharge lower than than the Lowest Discharge Voltage.

3) Do not mix the batteries with other types, or other brands or different performance batteries, this can damage the device and cause safety problems.

It is obligatory to read these safety instructions and warnings carefully before charging or using the containing batteries.
Failure to comply with these instructions will lead all warranties to be void and may cause a battery explosion or fire which may result in property damage, personal injury and/or loss of life. PILOTFLY CO. LTD CO. LTD, its distributors or retailers assume no liability for failure to comply with these safety instructions and warnings.

1) Stop using or charging a battery immediately whenever the battery is damaged, gives off an odour, becomes discoloured, deformed, starts to balloon, swells up, leaks, its temperature reaches over 160F (71C) or anything else abnormal occurs. Disconnect the battery and observe it in a fire safe place. Any damage or abnormal problems may cause the battery to leak, and the reaction with air may cause the chemical materials inside to ignite and even result in fire. Since delayed chemical reaction may occur, a battery can still ignite even after 10 minutes, you should keep observing the battery for at least 15 minutes as a safety precaution. Battery observation should be taken in a safe area outside of any building or vehicle and away from any combustible material.

2) Only charge Li-Po batteries with a qualified charger, included in the accessoires. Do not use a Ni-MH or Ni-Cad charger. The maximum charged voltage for each Li-Po-cell is 4.20V, never charge over 4.25V.
Failure to do so may cause a fire which may result in personal injury and property damage. Some Li-Po chargers in the market may have technical deficiencies, which may charge the Li-Po batteries incorrectly or at an improper rate. It is your responsibility solely to assure that the charger you purchased works properly.

3) Make sure all the wires and connectors are insulated. Never short-circuit the battery, or it will cause battery damage or even fire.

4) Never store or charge battery pack inside your car or in extreme temperature, since extreme temperature might ignite the battery and cause fire.

5) Store the battery in a place where infants/children cannot reach. Make sure infants/children do not handle the battery or the charger or other related equipment.

Handling and Caring for Battery

1) Never disassemble, modify, puncture, mechanically shock, crash and/or short circuit the battery, it may cause leakage, smoke
emission, ignition, explosion and even fire, which may result in personal injury and property damage.

2) Short circuit may cause fire and injury! If you need to cut the terminal wires of the battery, it is necessary to cut each wire
separately, ensuring the wires not to touch each other, otherwise, a short circuit may occur and potentially cause a fire. To solder a connector, remove insulating sleeving of Red wire and solder to positive terminal of a connector, then remove insulating sleeving of Black wire and solder to the negative terminal of the connector. Be careful not to short the wire lead. If you accidentally cause the battery to short circuit, place it in a safe open space and observe the battery for at least 15 minutes. A battery may swell or even possibly catch fire after a short time. Additionally, if a short circuit occurs and contact is made with metal (such as rings on your hand), severe injuries may occur due to the conductivity of the strong electric current.

3) Avoid squeezing the battery while connecting/disconnecting to the equipment , never destroy the outside of the battery or bring the battery into contact with the sharp and hard objects, this may lead to leaking, ballooning, short circuit , even fire.

4) Dispose the used or damaged Li-Po batteries at your local Hazardous Waste Facility or return them to the place of purchase.

Charging Process and Precautions

1) Never charge batteries unattended. Use specific qualified Lithium Polymer charger with balancer. Do not let the temperature exceed the range from 32°F to 113°F (0°C to 45°C).

2) Always charge the batteries in an isolated safe area away from any flammable/combustible materials. Never charge a Li-Po battery on a wooden workbench, inside an automobile, or on any flammable surface.

3) Reverse Charging is prohibited! You must check the polarity before connecting the battery to the charger. Do not reverse the positive (+) and negative (-) terminals when charging. Otherwise, the battery pack will be reverse - charged, abnormal chemical reactions will occur, and the excessively high current will cause damage, overheating, smoke emission, bursting and/or fire.

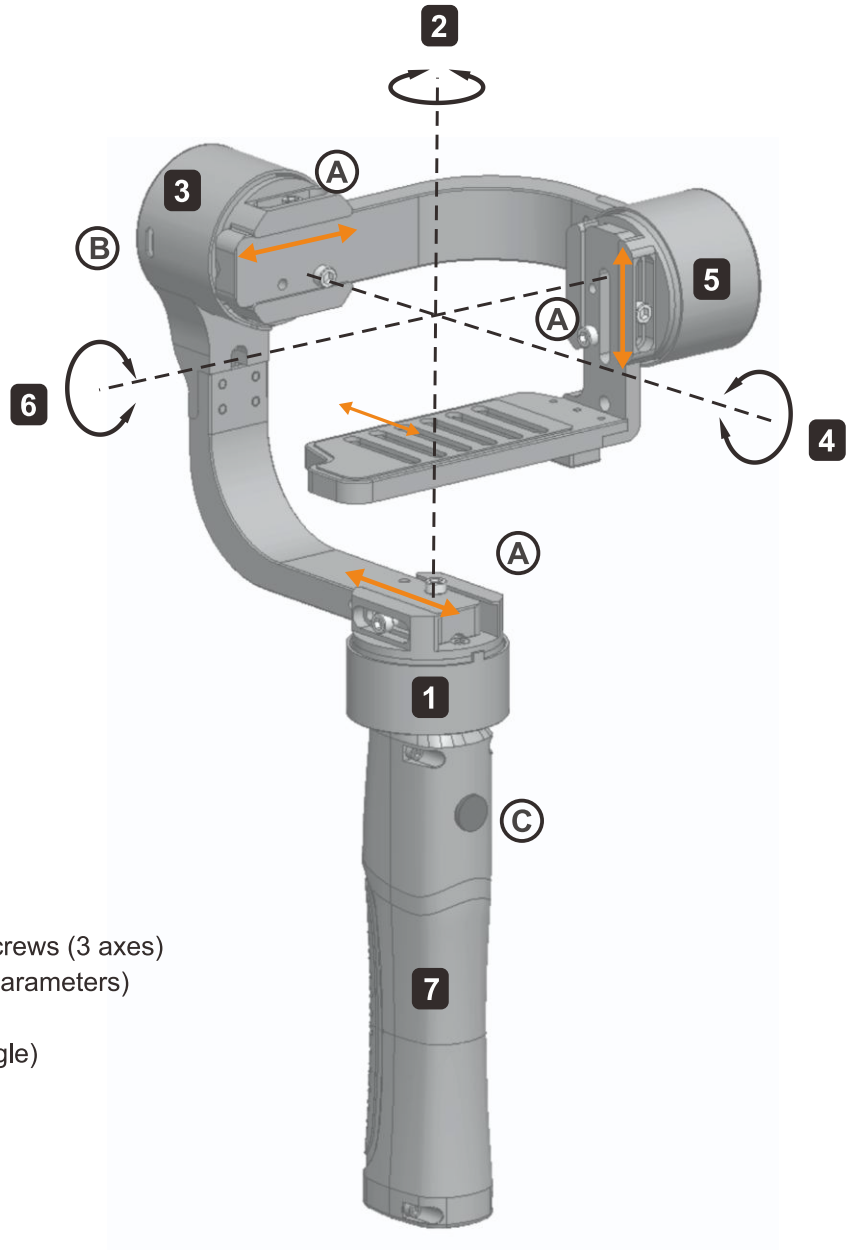

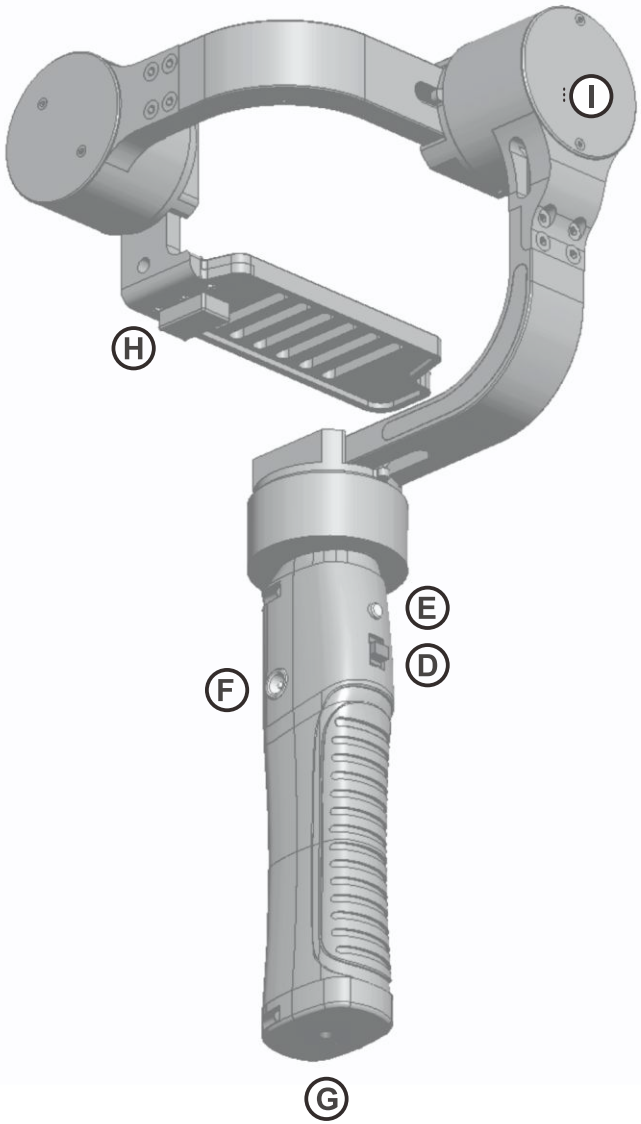

COMPOMENT

1. Pan (YAW) Motor
2. Pan (Yaw) Axis
3. Roll Motor
4. Roll Axis
5. Tilt (Pitch) Motor
6. Tilt Axis
7. Handle

A. Adjustment Point Screws (3 axes)
B. USB Port (only for parameters)
C. Power switch
D. Rock switch (Tilt angle)
E. Mode Button
F. DC-in (Charger)
G. 1/4" Screw hole
H. IMU Sensor
I. LED Status

CONNECTING

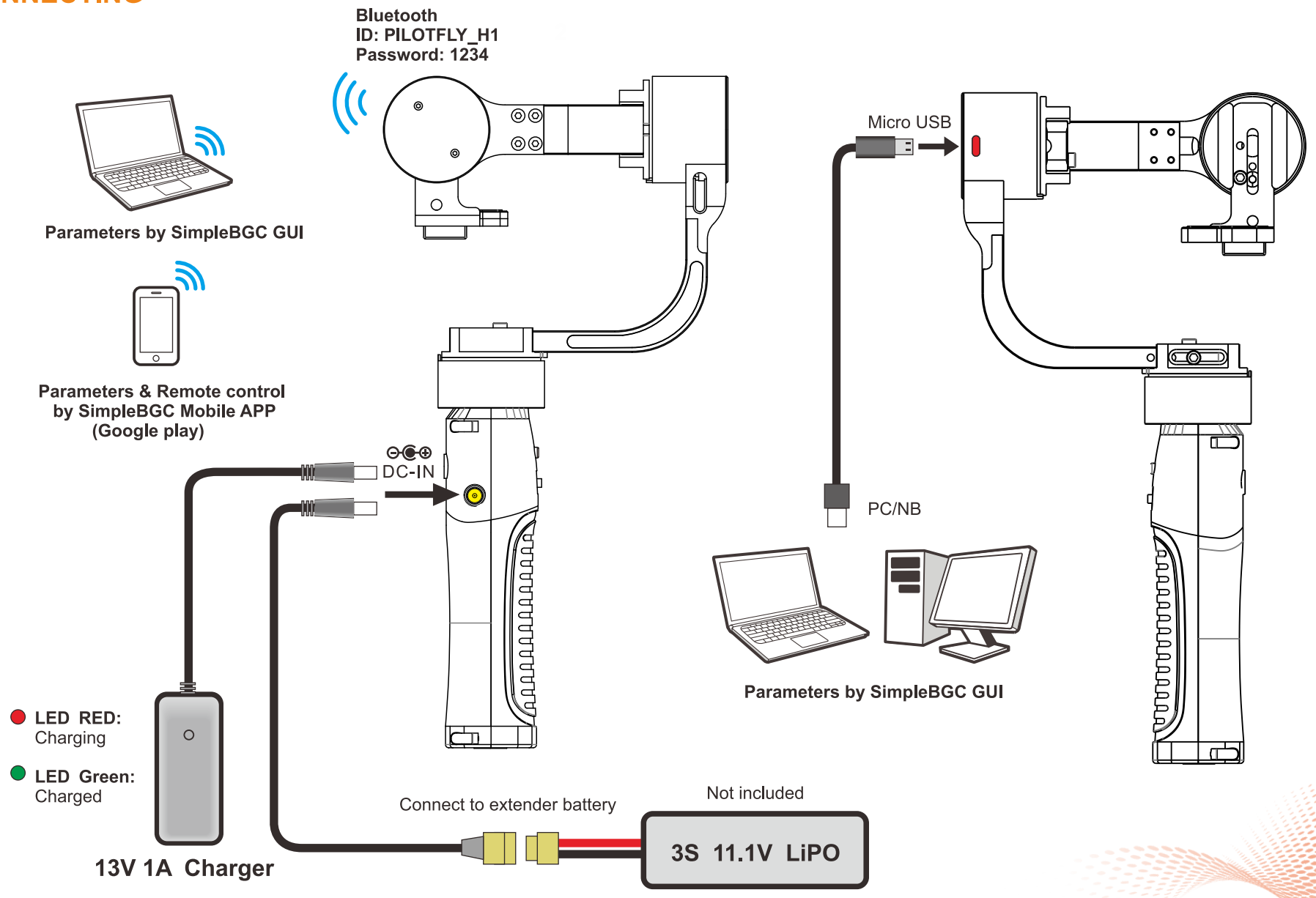
Bluetooth
ID: PILOTFLY_H1
Password: 1234
Parameters by SimpleBGC GUI
Parameters & Remote control
by SimpleBGC Mobile APP
(Google play)
DC-IN
Micro USB
PC/NB
Parameters by SimpleBGC GUI
LED RED:
Charging
LED Green:
Charged
13V 1A Charger
Connect to extender battery
Not included
3S 11.1V LiPO

CAMERA INSTALL & BALANCE

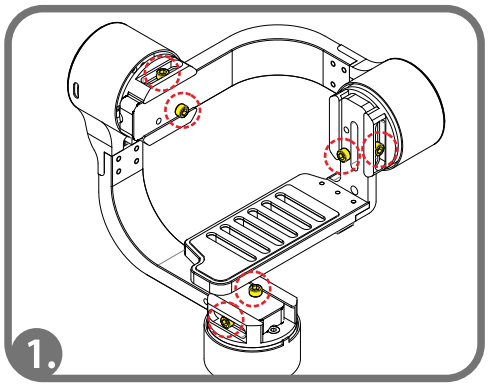

Loosen up all marked M4 screws.

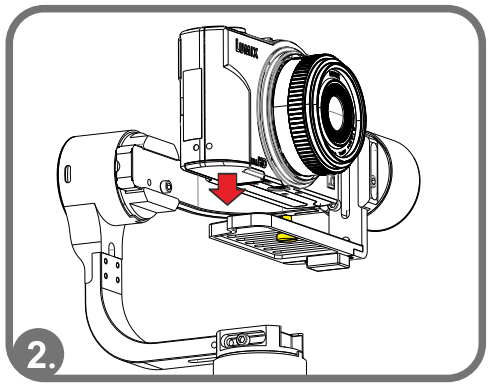

Attach the camera to the PILOTFLY H1 and fix it with the 1/4 screw.

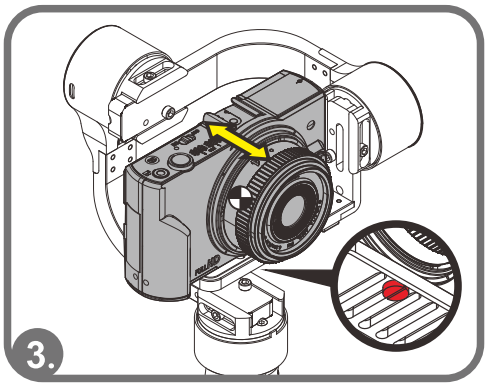

Shift the camera to balance and adjust the tilt axis and tighten the 1/4 screw.

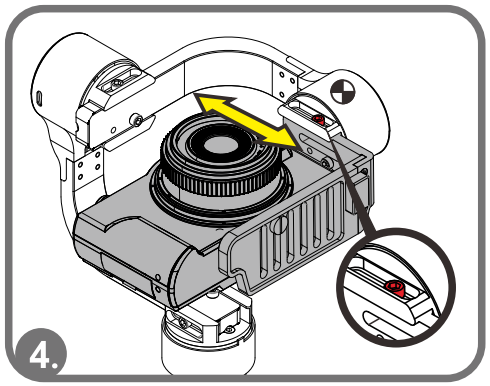

Adjust tilt axis (vertical).
Rotate the tilt axis that the camera lens is pointing straight up.
Shift the camera till it is balanced and tighten up the marked screw.

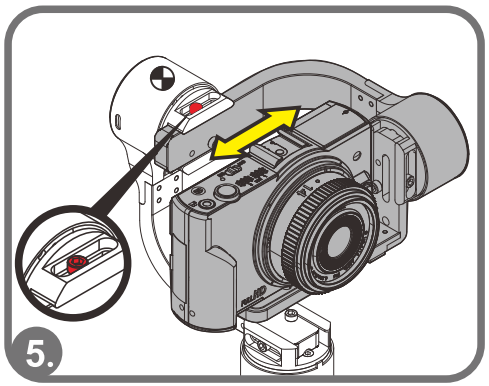

Adjust tilt axis (vertical).
Rotate the tilt axis that the camera lens is pointing straight up. Shift the camera till it is balanced and tighten up the marked screw.

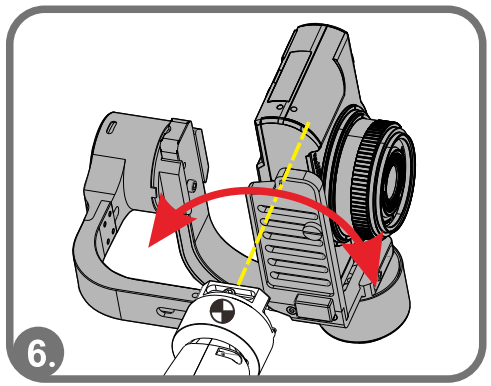

Balancing the Pan:
Hold the device as shown on the picture and check the balance of the pan axis.

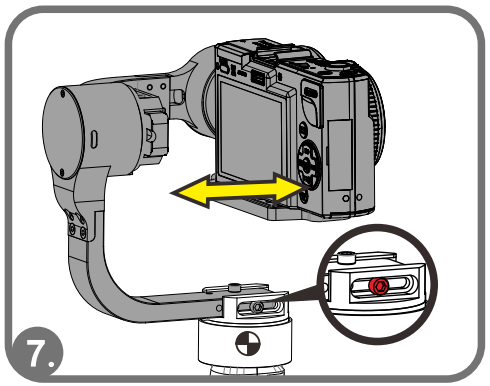

Shift the L-arm of the pan axis then tighten up the marked screws.

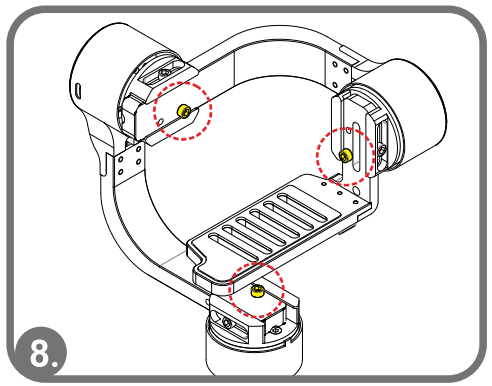

Ensure proper fixation and double check all screws again.
Tighten up if necessary.

SIMPLEBGC GUI SOFTWARE

Achieve the best shooting stabilizing effect. Using SimpleBGC GUI software for setting and fine tuning the PID sensitivity, adjust motor power due to the different camera weights. Best results for the stabilization will be achieved by a good setup.

Download SimpleBGC GUI software from Basecamelectronics.

http://www.basecamelectronics.com/downloads/32bit/#latest

Java Runtime environment is required in order to start the application. Ensure you have Java Runtime installed, if not download it at www.java.com
To start the application you need to have Java Runtime Environment by Oracle in your system: http://www.java.com

GUI for Windows:

Simply run SimpleBGC_GUI.exe

GUI for MAC OS:

Run SimpleBGC_GUI.jar

ATTENTION:

GUI uses a virtual COM port. Create a lock file to access it:

1. Start terminal (navigate to /Applications/Utilities and double click on Terminal)
2. Make folder "/var/lock" by command: sudo mkdir /var/lock
3. Change permissions by command: sudo chmod 777 /var/lock
4. Allow to run non-signed applications in System Preferences > Security & Privacy > General > Allow Applications downloaded from: Anywhere

GUI for LINUX:

Run run.sh.

Connection to computer

A connection between a controller and a computer can be established via a Micro-USB

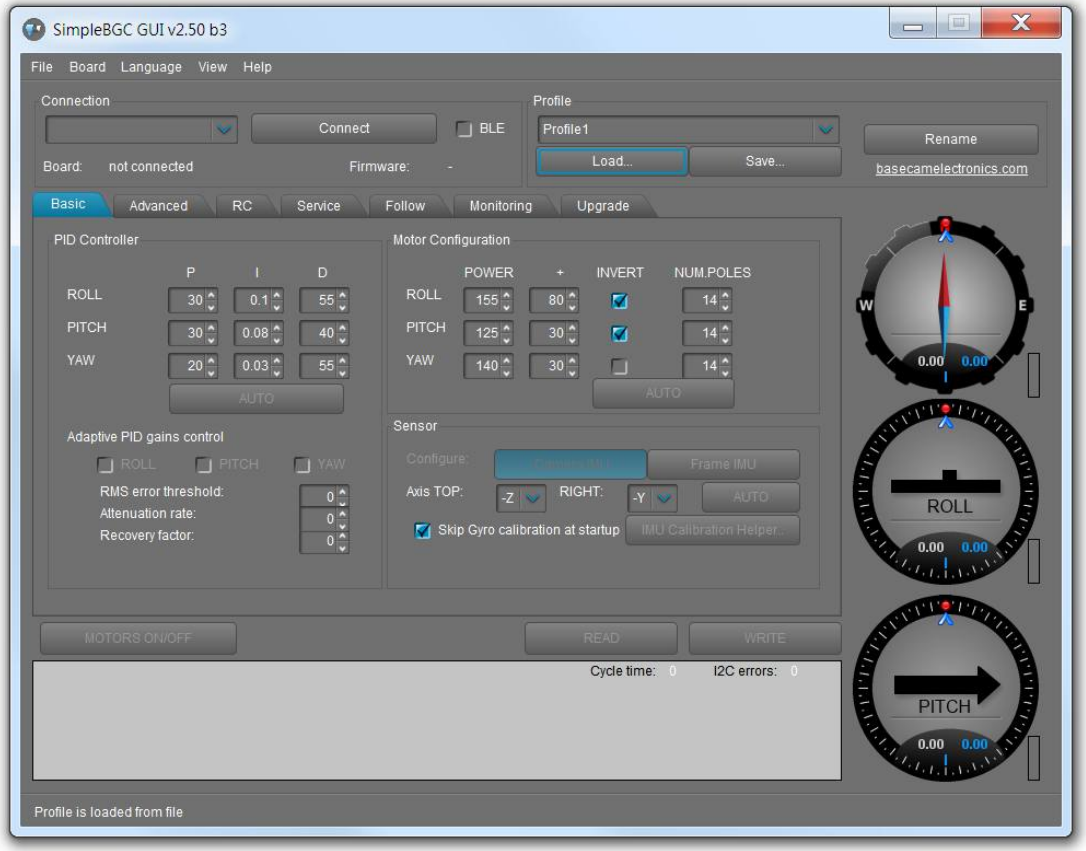

You will need to install a driver the first time you establish a connection. If the driver is not installed automatically, you can download it under follow link
http://www.silabs.com/products/mcu/pages/usbtouartbridgevcpdrivers.aspx

SIMPLEBGC GUI SOFTWARE SETUP

ATTENTION:

Please save the profile before you change any settings.

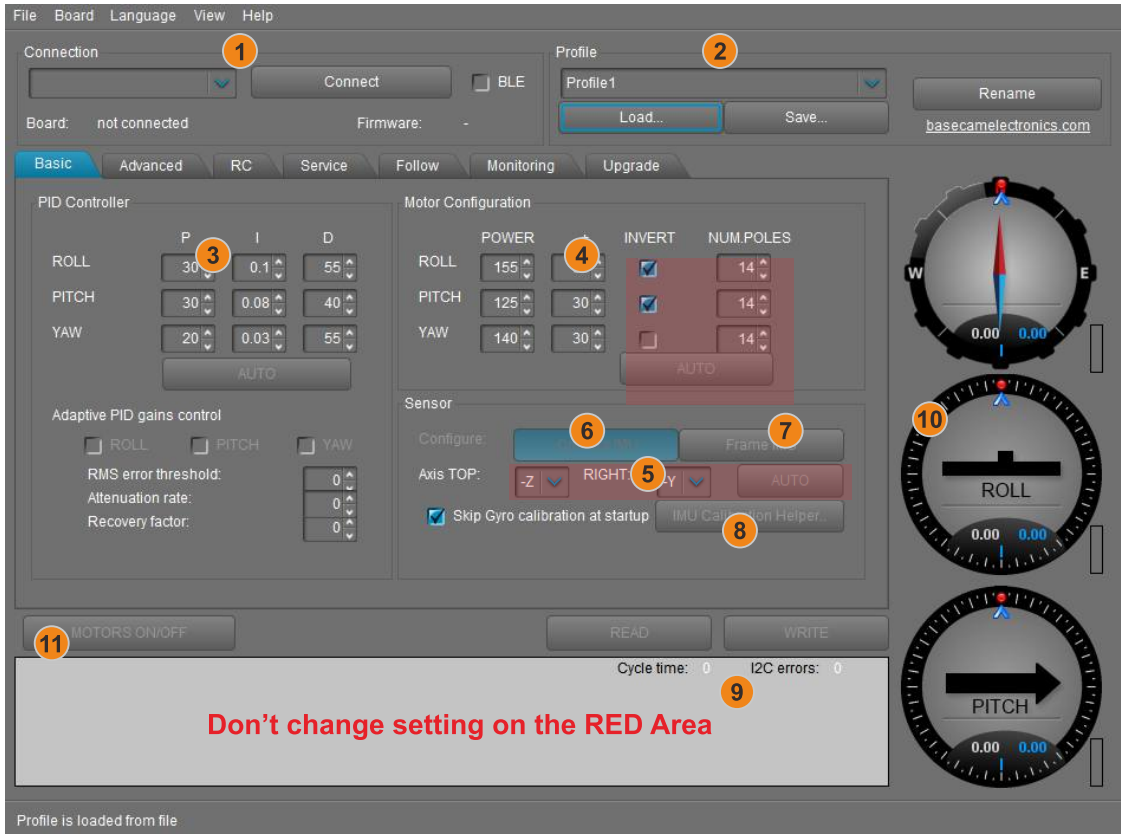

BAISC TAB

1. **Connection Montior -** Displays real time connection status to your PILOTFLY H1
2. **PROFILE -** Displays connection status and currently active profile.
3. **PID Controller -** Basic gimbal stabilization settings. Good camera stabilization will be usually achieved by adjusting these settings.
4. **Motor Configuration -** Maximum voltage supplied to the motors (0 - 255, where 255 means full battery voltage).
5. **Sensor -** Specify your IMU sensor board orientation and position on the gimbal
6. **Camera IMU-** Calibrating for Camera IMU (below on camera plate)
7. **Frame IMU -** Calibrating for Frame IMU (in H1+ handle)
8. **IMU Calibration Helper -** Calibtating for Gyro and Acc
9. **i2C Error counter -** Displays i2C error.
10. **Axis Position Indicators -** Displays real time positioning of each axes.
11. **MOTORS ON/OFF -** Turn on/off the power of motor

SOME REFERENCE PID & POWER SETTING

GH4-12-35mm / 7-14mm

	P	I	D		POWER	+
ROLL	30	0.1	55	ROLL	155	80
PITCH	30	0.08	40	PITCH	125	30
YAW	20	0.03	55	YAW	140	30

Lx100

	P	I	D		POWER	+
ROLL	30	0.1	45	ROLL	125	80
PITCH	30	0.08	28	PITCH	110	30
YAW	20	0.03	35	YAW	130	30

SONY A7 series - FE28mmF2

	P	I	D		POWER	+
ROLL	40	0.2	60	ROLL	140	80
PITCH	25	0.08	18	PITCH	125	30
YAW	20	0.07	45	YAW	150	50

Please follow us on our Facebook site for more PID and Power settings.

ADVANCED

1. Gyro deadband -

Is useful to eliminate micro vibrations which can occur to certain setups. Sensor data will be filtered and rounded behind the comma. Low Pass Filter (LPF) values beyond value 2 has an impact to the precision of stabilisation. It is not recommended to set the value <2.

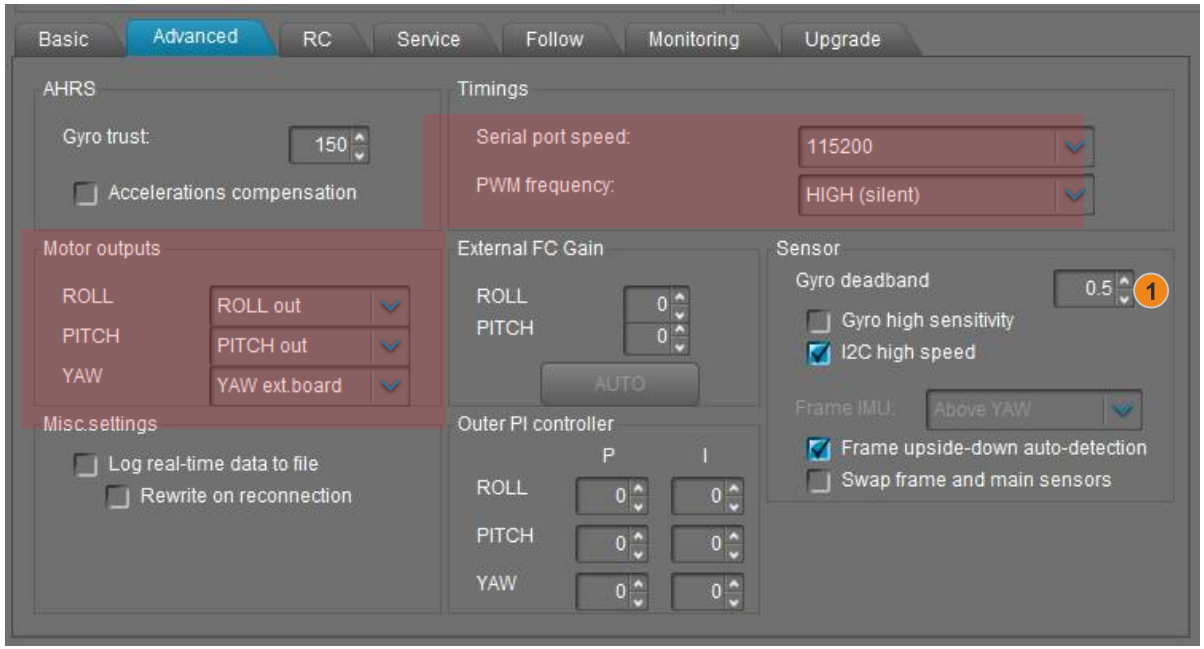

ATTENTION:

Please do not change any settings in the red marked area.

RC SETTING

1. RC Input Mapping -

Setting slider button input

2. RC Control via Rock switch -

ANGLE MODE —
Rock switch will control the camera angle directly.

SPEED MODE —
Rock switch will control the rotation speed. If stick is centered - camera stands

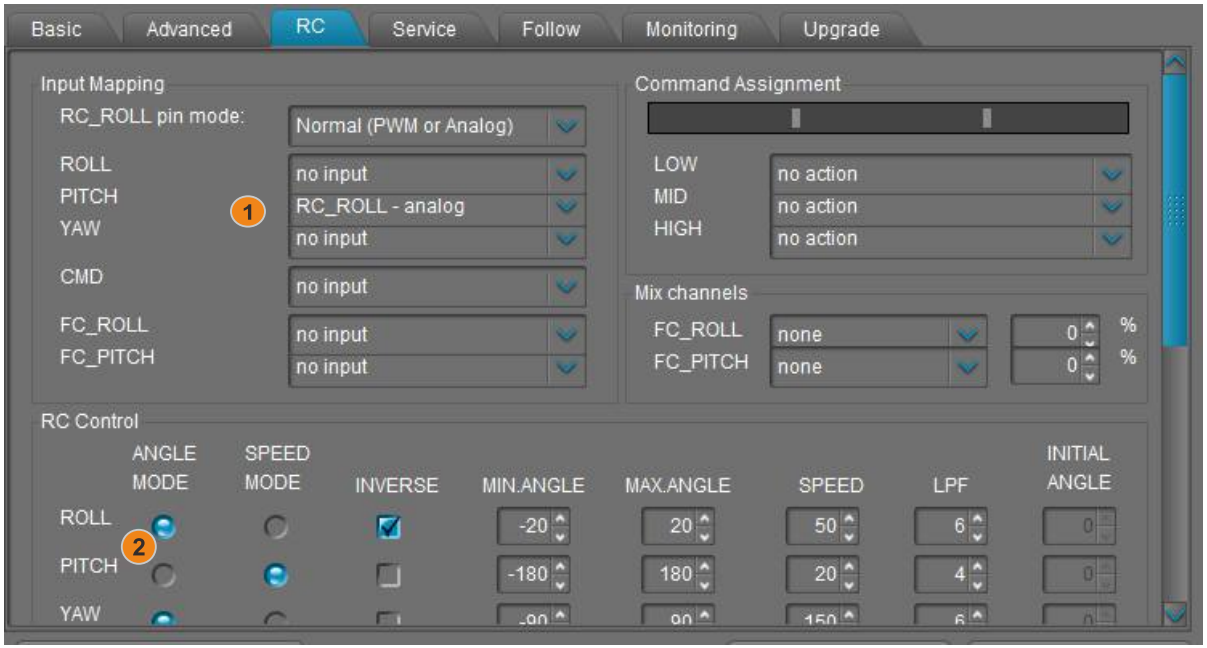

SERVICE

1. **Menu Button -**
The Control Button located at the handle is fully configurable to perform various actions depending on the number of consecutive clicks.

no action	
Use profile Profile1	Use profile (1~3) Switch to a given profile
Use profile Profile2	
Use profile Profile3	
Calibrate ACC	Calibrates accelerometers
Calibrate Gyro	Calibrates Gyro,
Swap RC PITCH<->ROLL	Switches tilt axes control servo to roll
Swap RC YAW<->ROLL	Switches pan axes control servo to roll
Set tilt angles by hands	
Reset controller	Resets the gimbal
Motors toggle ON/OFF	Motor power on/off
Motors ON	Motor on
Motors OFF	Motor off
Inverse YAW motor	Toggles inverted mode

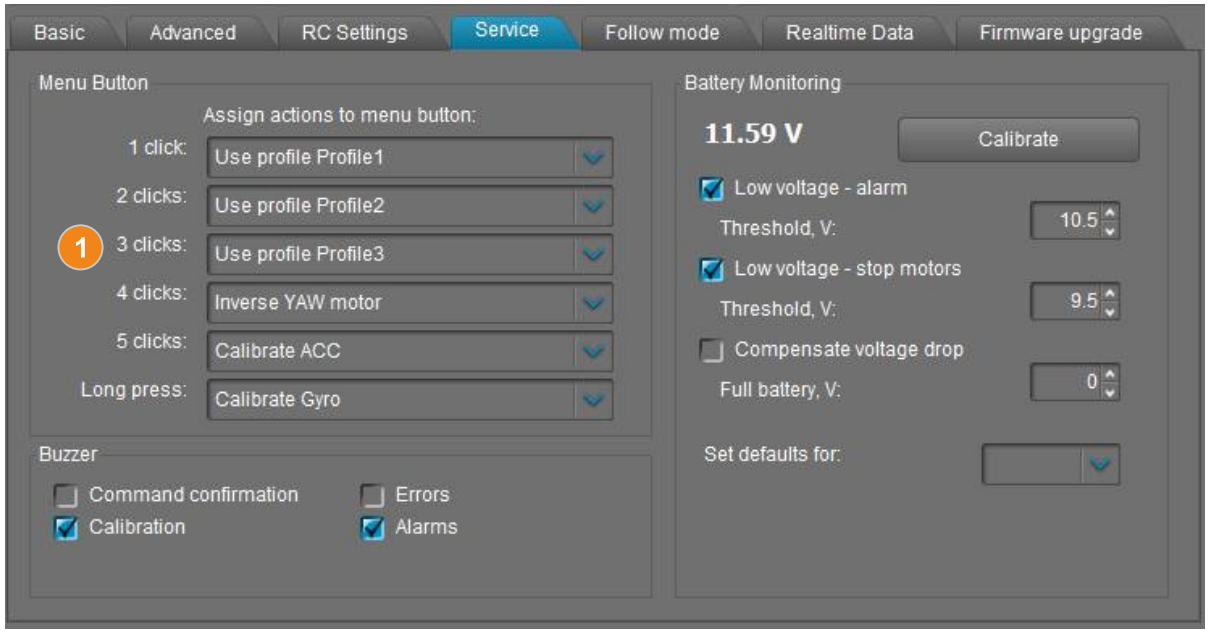

FOLLOW MODE

1. **Disabled -** Disables the follow of tile.
2. **Follow PITCH, ROLL -** Set to 90 ◦
3. **Follow YAW -** Turn on follow yaw.
4. **OFFSET-** it is a very important to properly configure the initial position of the motor's magnetic poles, because all further calculations use this information. For YAW axis it allows to fine adjust a camera heading relative to a frame heading. For PITCH and ROLL axis there is an option to calibrate offset automatically. To do this, power on system, hold frame leveled, and press AUTO button. Don't forget to write setting when finished. If the camera after power on is not leveled, you need to adjust the offset setting.
5. **SPEED -** Adjust the speed of the camera rotation in the follow mode.
6. **Deadband -** You can set the range where the rotation of an outer frame does not affect the camera. It helps to skip small jerks when you operate the gimbal by hands.

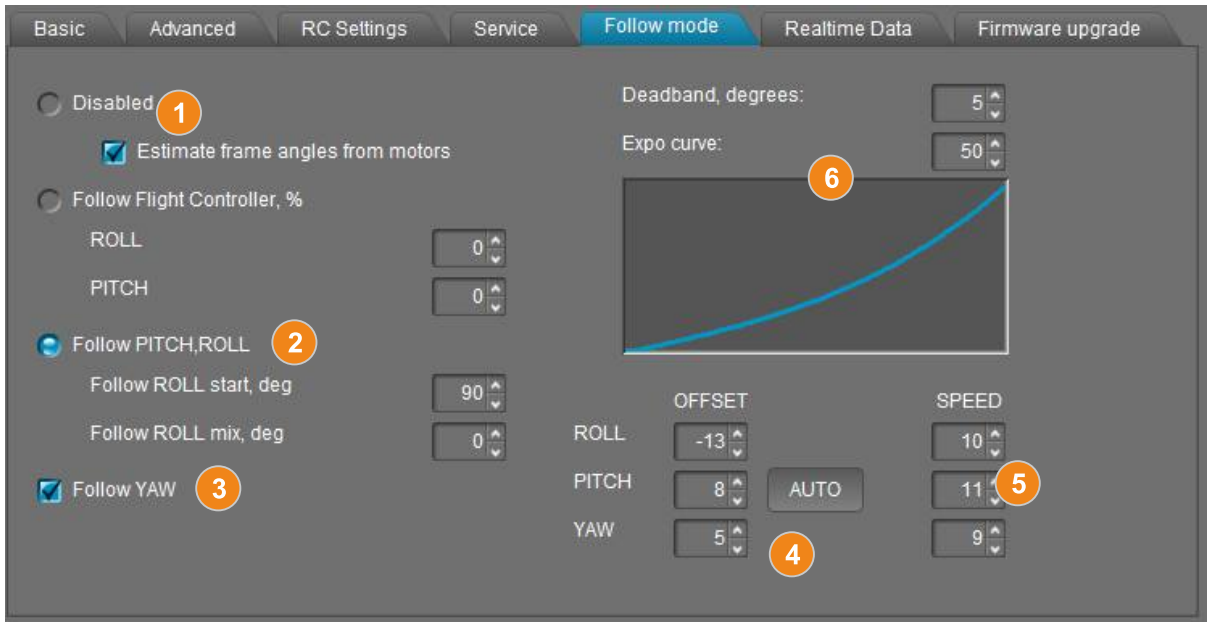

DEFAULT SETTING

1. **Default power start on Follow MODE (Profile)**
   Change using MODE ： （Needs Stable vertical holding and wait 1 sec for change mode）
2. **Follow MODE ：**
   Press the MODE button once (waiting 1 sec), the system will go into follow mode. Pitch, Roll and heading direction follows automatically the movements.
3. **Lock MODE ：**
   Press the MODE button twice, the gimbal will go into the lock mode. Pitch and Roll motor will be locked horizontal, the Yaw motor follows the target.
4. **Head lock MODE ：** Press the MODE button three times.
5. **Follow/Lock MODE ：**
   Change: In any MODE ：press the MODE button 1 time to enter the follow MODE ： press the button 2 times to enter the lock mode. 3 times to enter the Lock Head Lock MODE.
6. **Press button 4 times :** Not action
7. **Press button 5 times :** For Acc calibration.
8. **Press button long time :** For Gyro calibration .

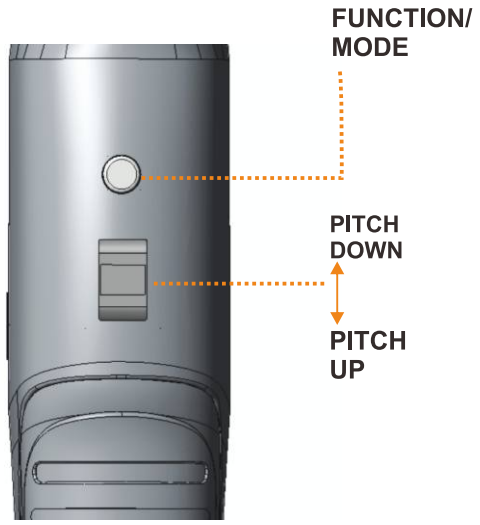

GYRO & ACC CALIBRATION

GYRO calibration ： Press the MODE button for about three to four seconds. The system will automatically initialize the gyro calibration. The blue status LED on the gimbal will flash slowly which indicates the calibration process. Wait about another three to four seconds to complete the calibration. ***The camera (IMU sensor) is not required for the gyro calibration in horizontal direction. Just keep the system steady on the table during the calibration process and prevent any movement or vibration.***

Acc calibration ： ***Place your camera (IMU sensor) in a leveled and neutral position (pitch 0 degrees, roll 0 degress)***. Press the Mode button five times and wait around 3 seconds to finish the ACC calibration. The Frame IMU (inside the handle) must be calibrated via SimpleBGC GUI Software installed on your PC or MAC.

GYRO calibration

Acc calibration

Demo for bad calibration and how to calibrate ACC and Gyro correctly.

PID AND MOTOR SETTINGS

P, I, D – PID regulation parameters for all axes.

P – Describes the power of disturbance response. Higher values means a stronger response reaction to external disturbance.
Raise this value until the stabilization quality of fast disturbances will be adequate.
If the “P” value is too high, oscillations of the axis will start to be present.
These oscillations will get worse if there are vibrations that reach the IMU sensor board.
If oscillations occur, raise the “D” parameter by 1 or 2 units, and then try to raise the “P" value again.

D – The “D” value reduces the reaction speed. This value helps to remove low-frequency oscillations.
A “D” value that is too high can cause high-frequency oscillations, particularly, when the IMU sensor is exposed to vibrations.
In special cases, it may be filtered out by digital filters (see below).

I – The “I” value changes the speed at which the gimbal moves to incoming RC commands and to move the gimbal back to neutral.
Low values result in a slow and smooth reaction to RC commands and to getting back to neutral.
Increase this value to speed up the movement POWER – maximum voltage supplied to the motors (0 - 255, where 255 means full battery voltage).
Choose this parameter according to your motor characteristics.
Basic tuning: Motors should not get too hot! Motor temperatures of over 80C will cause permanent damage to motor magnets.

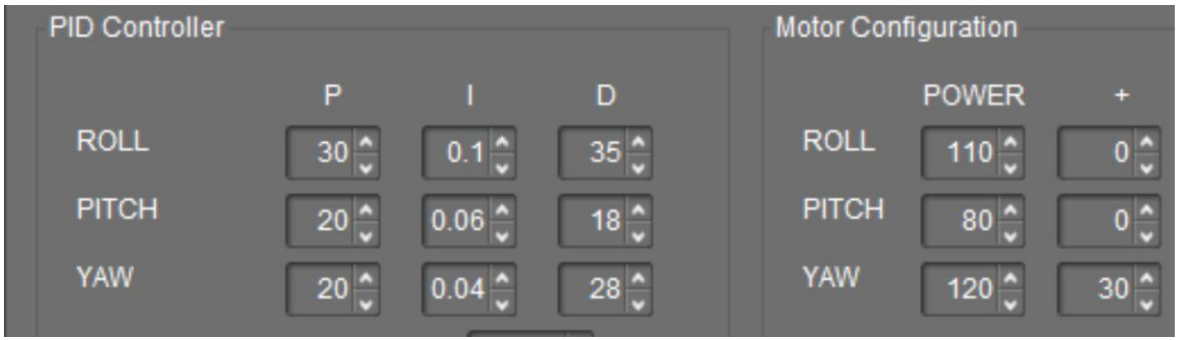

Raising the power equals raising the “P” value of PID settings. If you raise the POWER value, you should re-adjust your PID values as well.

“+”- Additional power that will be added to the main power in case of big error (caused by missed steps).
If main power + additional power value is set higher than 255, then it will be automatically limited to 255, which is the maximum value.

LED STATUS

- **Blue LED** — slow flashing - calibration in action fast flashing - indicates low battery
- **Red LED** — normal operation mode. slow flashing - calibration in action
- **Green LED** — blinks irregularly indicates system error (power off/on the gimbal)

POSSIBLE PROBLEMS AND SOLUTIONS

Problem	Possible causes	Solutions
High-frequency oscillations	• Feedback self-exitating as a result of high D parameter • Motor power too high • LPF setting	• Check the graphs to understand on what axis the problem is, and lower D value • Low for power of motor • Try 0-2 for Gyro Deadband to eliminate low or high frequency oscillations.
Low-frequency oscillations	• Feedback self-exitating as a result of high D parameter or high P	• Lower P, increase D
Camera slowly drifts by any or all axes just after power on	• Bad gyro calibration	• Re-calibrate gyro
GUI cannot connect to board	• Wrong COM-port selected GUI and firmware versions doesn't match.	• Try different COM-ports • download matching GUI version
Clicks and crunch are heard during work. LED is synchronously blinking	• I2C errors present. Errors are possible if sensor wires are too long, or motors outs affects sensor by capacitive Interference.	• Check the wiring of the sensor